Journal of Research Academic Writing
Vol. 3 No. 2 (2026): ISSN (Online): 3007-5343
DOI: https://doi.org/10.58721/qhepnz57
Analysis of Topicalisation in Dholuo

Analysis of Topicalisation in Dholuo

Samwel Odero, Emily Ayieta Ondondo & Robert Ochieng
Jaramogi Oginga Odinga University of Science and Technology, Kenya

Article History
Received: 2026.07.20
Revised: 2026.11.10
Accepted: 2026.11.14
Published: 2026.11.28

Keywords
Dholuo
Focus
Ex-situ
Topicalisation

How to cite:
Odero, S., Ondondo, E. A., & Ochieng, R. (2026). Analysis of Topicalisation in Dholuo. *Journal of Research and Academic Writing, 3*(2), 228-238.

Copyright © 2026

Abstract
Topicalisation is a structural change focusing on the alteration of information structure with an aim of positioning a constituent of a sentence as the departure point for the sentence. The phenomenon, therefore, involves an interaction between a syntactic structure and organization of a discourse of a sentence. It is worth noting that the phenomenon, being dependent on a syntactic structure of a construction, is driven by change of wording pattern of a language. These wording patterns are determined by information structure. Therefore, a speaker will always restructure their wording patterns with the aim of packaging information in a manner that the hearer benefits. One of the ways the information can be packaged is through mental activation of a referent. One of the syntactic processes through which this activation is achieved is topicalisation. From existing literature, Dholuo has been discovered, just as other languages, to exhibit both canonical and non-canonical word order patterns. Non-canonical word order patterns are understood to be derivatives of canonical ones through syntactic processes that are dependent on overt movement of a noun phrase. Some of these movements are motivated by information structure of a construction. Topicalisation as a movement is worth being investigated in a language like Dholuo characterized by unrestrictive movement of noun phrases and also being a Topic prominent language. This paper, therefore, investigates topicalisation in Dholuo and the syntactic operations behind movements of topicalised constituents; their discourse information and structural configuration of Dholuo that license topicalisation and the interpretation of the topicalised constituents. To generate data for the analysis of Topicalisation in Dholuo, the researcher used elicitation frame. The frame was structured in such a way that it provided data in the syntactic shape the study needed. The generated data was then subjected to Minimalist Programme analysis using the principles of feature driven movement, feature checking and feature interpretation. Established in Topicalisation in Dholuo is movement of an NP to an ex-situ position – outside the original canonical site relative to the host verb. The resultant pattern after the movement is a non-canonical word order pattern specific to Dholuo language. Specific in such a way that two noun phrases happen to occur in a sequence with the preceding noun phrase occurring outside the local domain of the core verb. The findings of this study are expected to reveal to linguists how Dholuo manipulates its word order pattern in the packaging of information and in the developing of emphasis during natural conversations.

Introduction

In text production, as viewed by Fujihara, Kuribayashi, Abe, Tokuhisa and Inui (2022), the topic of a sentence plays an important role as it indicates the concern of the message and controls word ordering. Halliday, Christian MIM and Christian (2014) argue that the more salient a concept is in a context the more likely it is to be tropicalized. In the grammatical ranking, the Topic of a sentence has a centering-forward and such a higher-ranked entity is expected to have a high rank centering-forward in the next utterance (Fujihara et al., 2022). Sometimes topicalisation goes beyond NP to include VP. This is evident in the German syntax. Hubert (1990), for example, analyses syntactic properties of German syntax. Characterizing German syntax as VP-topicalisation. The VP-topicalisation is marked by inclusive verbal projection, that is, a VP that contains the subject. in the formation of a topic in German syntax, a VP moves to the SPEC-C position. These movements by NP and/or VP happen within domains of pragmatic functions. With Dholuo, unlike German, this is achievable through NP movement.

Word order within the domain of pragmatic functions, as posited by Ilić (1998) and Okombo (1997), is dependent on discourse functions of the words forming a sentence. Contexts under which the pragmatic elements are used can result into alternations of word order patterns in Dholuo one of which is topicalisation. These alternations, as observed by Birner and Ward (1998) as well as Travis (1984), are for special discourse requirements. Word order patterns, therefore, change by discourse functions (Jerono, 2012; Randy, 1995; Shields, 2003; Stavros, Caroline & Rusudan, 2009).

Cross-linguistic pragmatic studies have shown that non-canonical word order, topicalisation included, can often be explained if information structure is taken into account (Mwamzandi, 2014). A number of studies as reported by Mwamzandi (2014) show the relationship between word order and information structure. These studies include subject inversion in Bantu languages by Bresnan and Mchombo (1987) as well as Demuth (1990); postposing, preposing and dislocations in English by Birner and Ward (2009) and Swahili reciprocal constructions by Mwamzandi (2014).

Grammatical phenomena such as postposing, preposing, dislocation, as posited by Temürcü (2002), are not eligible to be analysed within a strict formal – syntactic framework, and that surface forms can best be analysed as resulting from the interaction of syntax and pragmatics. Therefore, discourse functions such as topic and focus are frequently relegated to extra-syntactic modules thus considered external to the core grammar, and they may have a role in the determination of the surface forms by inducing stylistic movement or PF movements (Kidwai, 1999 & Koike, 1997). In the MP analysis of word order patterns in Dholuo within pragmatic domain, topic and focus features are the only strong features that can be checked and interpreted. The rest of the features are not that strong to attract feature checking (Kidwai, 1999 & Koike, 1997).

Topic in Dholuo information structure is associated with functional categories of their own. The question is, how is topicalisation achieved within the domains of syntax and pragmatics in Dholuo? This study sought to answer this question. Established in this study under syntactic analysis of topicalisation in Dholuo is that topic argument almost always occupies the specifier positions of their respective heads. It is at these heads where Topic features are interpreted and checked. Therefore, in the minimalist analysis of Dholuo constructions with Topic resulting from optional movements, functional heads for Topic are introduced into the configuration for the checking of Topic features. The Minimalist Approach to the analysis of topicalisation in Dholuo is provided in the subsequent sections.

Methodology

Employed in this study was a triangulation method characterized by use of multiple methods in collecting data namely elicitation and audio-recording. The choice of multiple method is justified by Denzin and Lincoln (2003) and Kiguru's (2014) established facts that use of more than one method enhances strengthening of reliability of each chosen method as a phenomenon can be observed from different points of view. Through elicitation, information required and concerned with the linguistic competence of the informants was generated in the form in which it occurred in a controlled conversation. Four informants: two males and 2 females were recruited for the activity. And because the researcher's questions in the elicitation frame were in English, and the data was needed in Dholuo, the researcher used bilingual informants because of their eloquence in the Dholuo and English.

Given that the researcher and the informants have no control about such information, the most appropriate way to get it was to make the informants produce it voluntarily. In conducting elicitation, the study employed elicitation frames as an instrument for this method. The instrument, as established by Sande (2019) in his study of Olusuba morphophonology, is the best for a study like this that requires corpora associated with structural behaviour of a language. The instrument, therefore, was used to collect sentences in Dholuo in their appropriate paradigms – paradigms that could generate sentences with the targeted elements. The researcher, therefore, provided the informants with the sentences constructed in English. It is these sentences whose Dholuo equivalences were used in constructing the corpus for the study. Audio-Recording was also used to capture the proceedings during all the elicitation sessions to avoid missing important data. Because, as observed by Vaux and Cooper (2003), field sessions are hectic and one may often miss some of the things that an informant is saying. To avoid a mix-up in the audio recorded data, each and every session of data collection was labeled in the format: day and date of session, name of informant, session number and time of session. The audio recorded data was then played back for transcription and data analysis. The instrument used with this method was an audio recorder, SonyICD-MX20.

The data was analyzed in steps. Preliminary included organizing the data collected by elicitation, and audio recording into syntactic and pragmatic patterns. This was done through playing and replaying the audio recordings. Data was then described as it is in the themes that is semantic and pragmatic patterns and then analyzed within the framework of MP. The analysed data was presented in tables, and descriptive write ups, and MP trees. Examples in the descriptive write ups were presented in a three-tier format where appropriate and given morpheme by morpheme glossing.

Findings, Analysis and Discussions

The following subsections provide findings on syntactic behaviour of Topic in relation to other constituents in attaining pragmatic features such as prominence, packaging of information and activating referent of information in the hearer during conversation. Alongside the findings is analysis of the data and discussion.

Topic-Rheme Word Order Pattern

In the co-occurrence of the pragmatic elements the topic and the rheme in Dholuo, a pattern is formed in which case the topic precedes the rheme as shown in (1).

1. a) *Loch lwar*
   Kingdom fall
   'The kingdom falls'

b) *Mbura manyo oyieyo*
Cat hunt rat
'Cat hunts a rat'

As shown in example (1a) above, the topic '*loch*' and the rheme '*lwar*' co-occur thus forming a canonical pattern. The topic '*mbura*' in (1b) also co-occur with the rheme '*manyo oyieyo*' to form a canonical word pattern.

In the MP analysis of a Topic – rheme word order in Dholuo, an NP moves from within a VP domain to Topic Phrase (TopP) via TP to get Topicalisation. The topicalisation is a result of checking of feature of topic at the specifier position of its respective head. The NP '*loch*' in (1a) above which is syntactically assigned a subject role, is interpreted as a Topic within the pragmatic domain as it is what the sentence is about. The VP '*lwar*', interpreted as a predicate within syntactic domain, acquires a property of rheme in the pragmatic domain. The rheme, in this case, is not a strong feature that can generate a head in the MP analysis of sentence for checking. It is, therefore, checked and interpreted as a verb which contains strong features such as tense that must be checked at its respective head. Consider the MP analysis in figure 1.

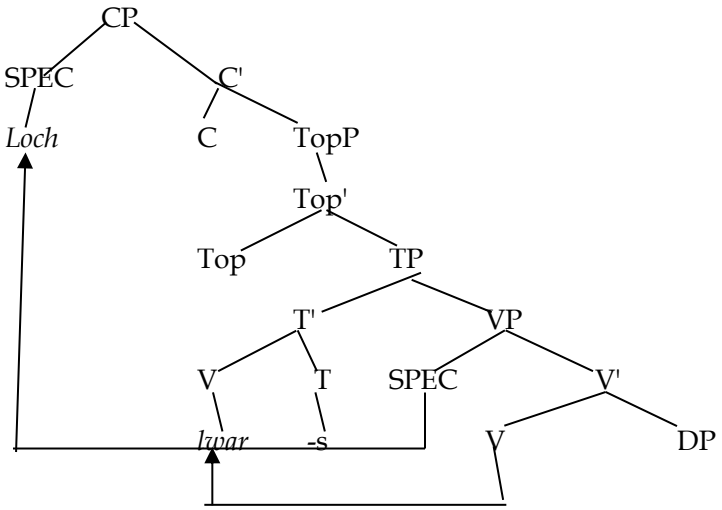

Figure 1: Configuration for the Topic-Rheme word order pattern loch lwar

As shown in figure 21, the NP '*loch*' upon topicalisation at topic head position (SPEC/CP), it acquires +T feature through the merger of the NP with the SPEC/CP head. To avoid crashing, the NP is checked for +T feature. The VP '*lwar*' also moves from within the VP domain via T/T' head to V/T' head for tense feature checking.

Topic-Focus Word Order Pattern

The topic-focus word order pattern in Dholuo occurs when the subject is the presupposed or old information. One of the most pervasive strategies for conveying alternative structure, according to Mwamzandi (2014), is to move an element into sentence-initial position resulting into focal properties by the moved argument (Mwamzandi, 2014). In the sequence of Topic-Focus in Dholuo, topicalisation is used to emphasize on the subject or particularize the subject associated with the action indicated by the verb. The fronting of topic in Dholuo constructions is as a result of the emphasis the speaker wants to relay to the hearer concerning the entity (Topic). See example (2).

2. a) *En Onyango ema maro thiedho*
   It Onyango FOC-REL mother-in-law treat
   'It is Onyango that is being treated by the mother-in-law'

   b) *Ma e buk ma yiech*
   this is book that tear
   'This is the book that tears'

As shown in example (2a) the Topic '*en Onyango*' denotes that no any other person but 'Onyango' that the mother-in-law treats. Example (2b) also denotes specificity by emphasizing that no any other book but 'this book' that gets torn.

Topic-focus word order pattern in Dholuo can be attributed to theory of Topic-Focus articulation. In the topic-focus articulation, given information tends to be presented at the beginning of a clause and new information at the end. Researchers, as posited by Blekher (1995), agree that this tendency to place new information at the end of a sentence is an information processing function. According to Blekher (1995), the mind is better able to integrate new information into its representation of the sentence when the old information precedes the new one (Blekher, 1995).

In the topic-focus articulation in Dholuo sentences the topic precedes the focus in which case, the focus becomes the informative part of the topic as example (3) illustrates.

3. *Guok e le mager*
   Dog FOC animal mager
   'Dog is a fierce animal'

Because of its informativeness in Dholuo constructions, focus is always preceded by the Topic that it (Focus) informs the hearer on. This explains ungrammaticality of the sentence in (4).

4. **E guok le mager*
   FOC dog animal fierce
   'Dog is a fierce animal'

In the Topic-Focus word order pattern in Dholuo, as in other languages characterised with topicalisation and focalization, the topic and focus are both associated with functional categories and are, therefore, considered as strong extra-syntactic constituents with strong features that require checking for their interpretation (Egashira, 1997& Sande, 2016). In the MP analysis of Topic-Focus word order pattern, functional topic and focus heads are introduced in the MP trees where +T and +F features are checked. Consider MP analysis of Topic-Focus construction (3) above in figure 2.

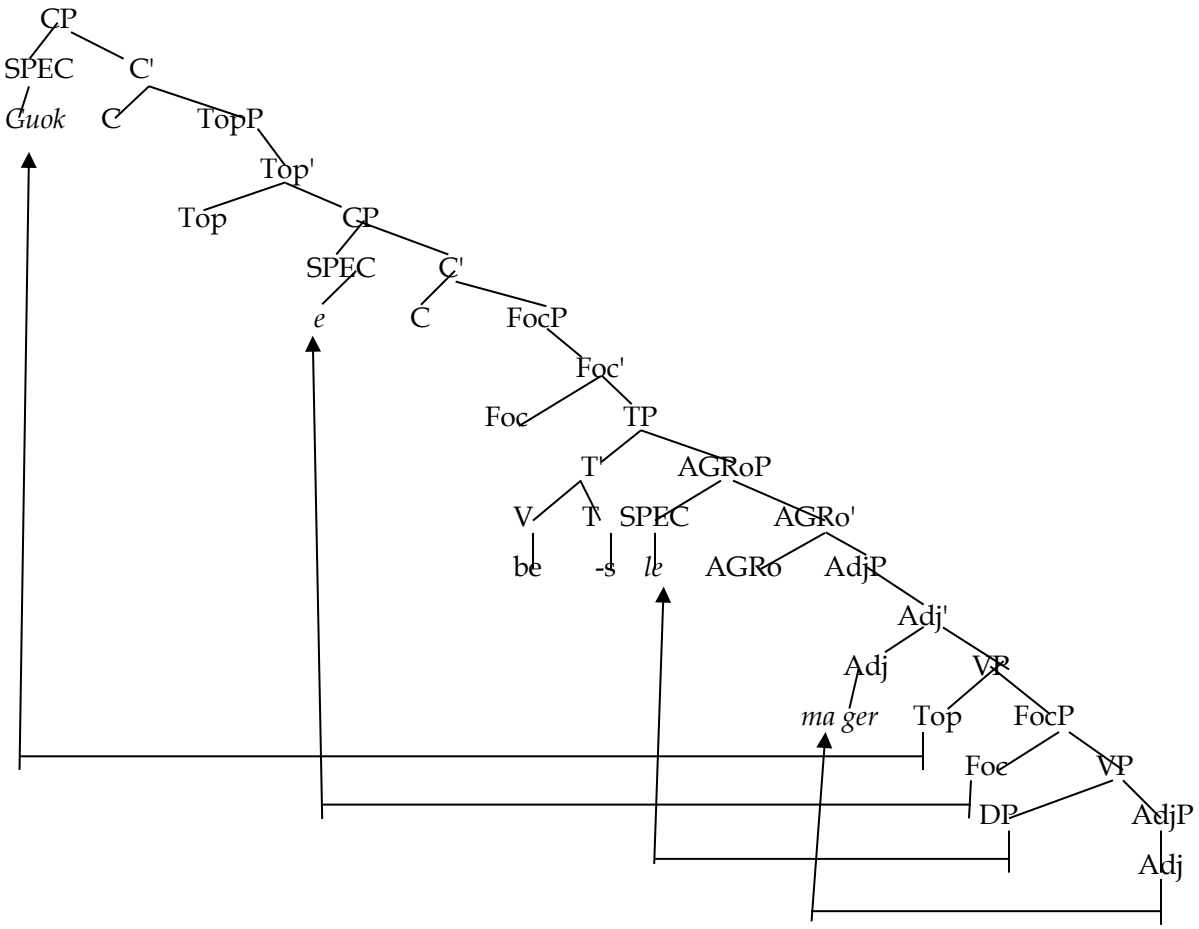

Figure 2: Configuration for the Topic-Focus word order pattern guok e le ma ger

As shown in figure 2 the topic '*guok*' moves from within VP to SPEC/CP node where +T feature is checked. The focus '*e*' also moves from VP to SPEC/CP for +F feature checking. The adjective '*ma ger*' moves from within VP to Adj/Adj' to check lexical feature for adjective. The DP 'le', on the other hand, moves from VP domain to SPEC/AGRoP for accusative feature checking. The auxiliary 'be' which is not realizable phonologically though covertly present makes a movement to V/T' head via T/T' head for tense feature checking.

Topic-Tail Word Order Pattern

Topic-tail word order pattern in Dholuo co-occur in the order of the Topic-Tail. This pattern, just like Topic-Focus word order pattern, can be explained on the ground of Topicalisation. A subject becomes topicalized when a speaker wants to emphasize on the subject or particularize it in relation to the auxiliary 'be'. Auxiliary in this case is used to show the status of the subject. Consider the data in (5).

5. a) *Ot, en ngima*
House be life
'House is life'

b) *Wuoyi, in lek*
Boy be dream
'Boy, you are a dream'

The topics '*ot*' and '*wuoyi*' in examples (5a) and (5b) respectively have been topicalized to emphasize on them or particularize them.

The Topic-Tail word order pattern in Dholuo is formed from the topic and the tail in that order as shown in example (6).

6. *Samson, in nyathi*
Samson you child
'Samson, you are a child'

In the MP analysis of Topic-Tail word order, an NP gets topicalized and takes the position of specifier. It is at this point that +T features are checked. Figure 3 shows a configuration of the sentence in (6) above upon analysis.

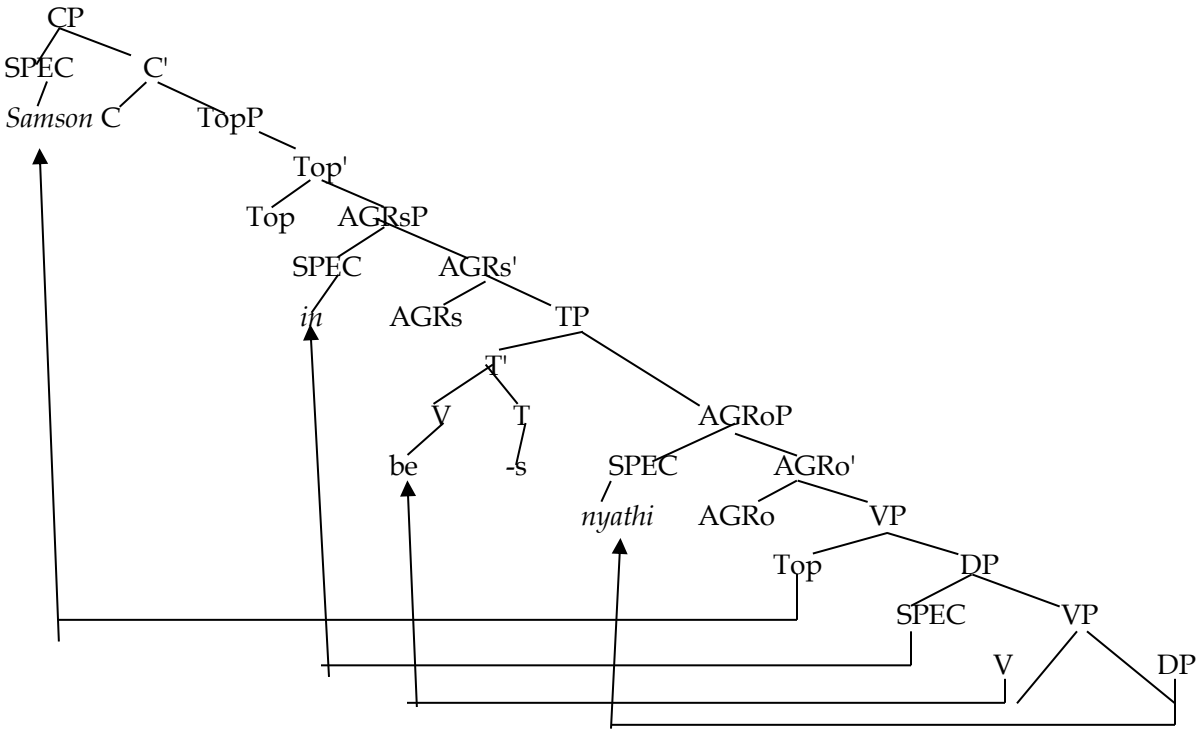

Figure 3: Configuration for the Topic-Tail word order pattern Samson, in nyathi

As shown in figure 3 above, the Topic 'Samson' moves from within the VP domain to SPEC/CP to check its +T features. The DP '*in*' also moves from VP domain to SPEC/AGRsP node to check its nominative case feature. This is followed by movement of the auxiliary, which is covertly represented in this sentence, to VT/ via T/T' for checking of tense feature. The DP 'nyathi', on the other hand moves from VP to SPEC/AGRoP for checking of its accusative case feature.

Topic-Tail-Rheme Word Order Pattern

Topic-tail-rheme word order pattern in Dholuo is as a result of topic fronting. This fronting is as a result of need of change in the information structure by the speaker. This kind of fronting of topic is common in topic prominent languages, Dholuo included. These languages display a kind of movement in which an element of a sentence which does not display any syntactic dependency to the rest of the sentence is fronted thus becoming independent of the rest of the sentence (Yen-Hui, 2000).

This structure is commonly observed in Dholuo especially in the Topicalisation of an NP from the canonical word order SVO. Consider example (7).

7. *Onyango kik mul nyathi*
   Onyango NEG touch child
   'Onyango should not touch the child'

When the object '*nyathi*' becomes topicalized, it (*nyathi*) becomes independent of the rest of the sentence (Tail) hence a hanging topic as shown in example (8).

8. *Nyathi, Onyango kik mul*
   Child Onyango NEG touch
   'As for a child, Onyango should not touch'

In the MP analysis of this pattern using example (9) below, the NP, '*nyathi*' gets topicalized and takes the position of specifier. Checking of +T features are checked at SPEC/CP node. Figure 4 shows a configuration of the sentence in (9).

9. *Nyathi, Onyango kik mul*
   Child Onyango NEG touch
   'As for a child, Onyango should not touch

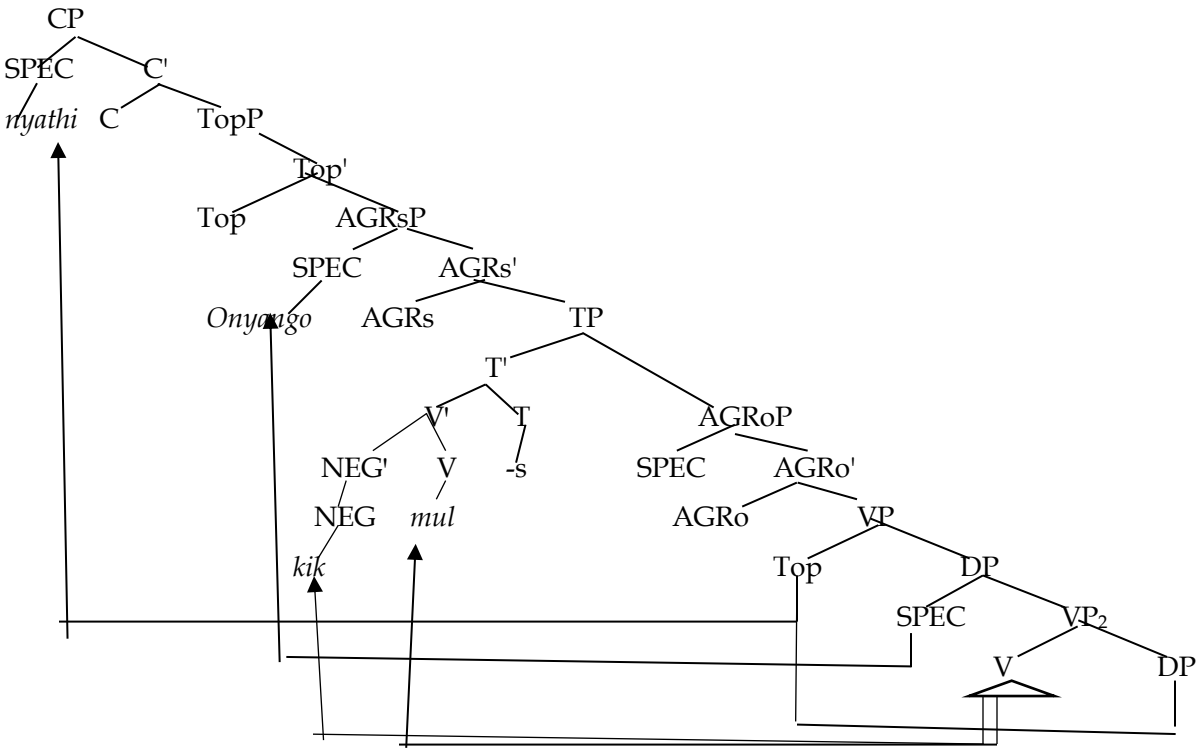

Figure 4: Configuration for the Topic-Tail-Rheme word order pattern 'Nyathi, Onyango kik mul'

As shown in figure 4 above, the topic '*nyathi*' moves from within the VP domain to SPEC/CP to check its +T features. The subject argument '*Onyango*' moves from the VP matrix to SPEC/AGRsP node to check its nominative feature. The NegP 'kik' also moves to the NEG/V' node for its checking and interpretation. Other grammatical features interpretable via movement is tense feature which is achieved through movement of the verb '*mul*' despite its zero marking.

Topic-Theme-Rheme Word Order Pattern

The topic-theme-rheme word order pattern is used in Dholuo when the speaker intends to describe the theme using both the topic and the rheme. In this case, the theme is assumed by the speaker to be known by the hearer. The theme and rheme, therefore, are meant to make it open to the hearer the speaker's impression on the theme as shown in example (10).

10. *Rach bura ni en ng'eny ji*
Bad meeting this be excess members
'The badness of this meeting is the excess membership'

The topic '*rach*' in sentence (10) above, occurs together with the theme '*bura ni*' and the rheme '*en ng'eny ji*' to form the non-canonical sentence. The topic and the rheme in this case are meant to give more information on the theme the sentence is about to the hearer.

In case of Topic-Theme-Rheme MP analysis, it is only the Topic whose pragmatic feature is checked and semantically interpreted. The rest are subjected to syntactic check and interpretation. Consider analysis of sentence (11) in diagram 5.

11. *Rach bura ni en ng'eny ji*
Bad meeting this be excess members
'The badness of this meeting is the excess membership'

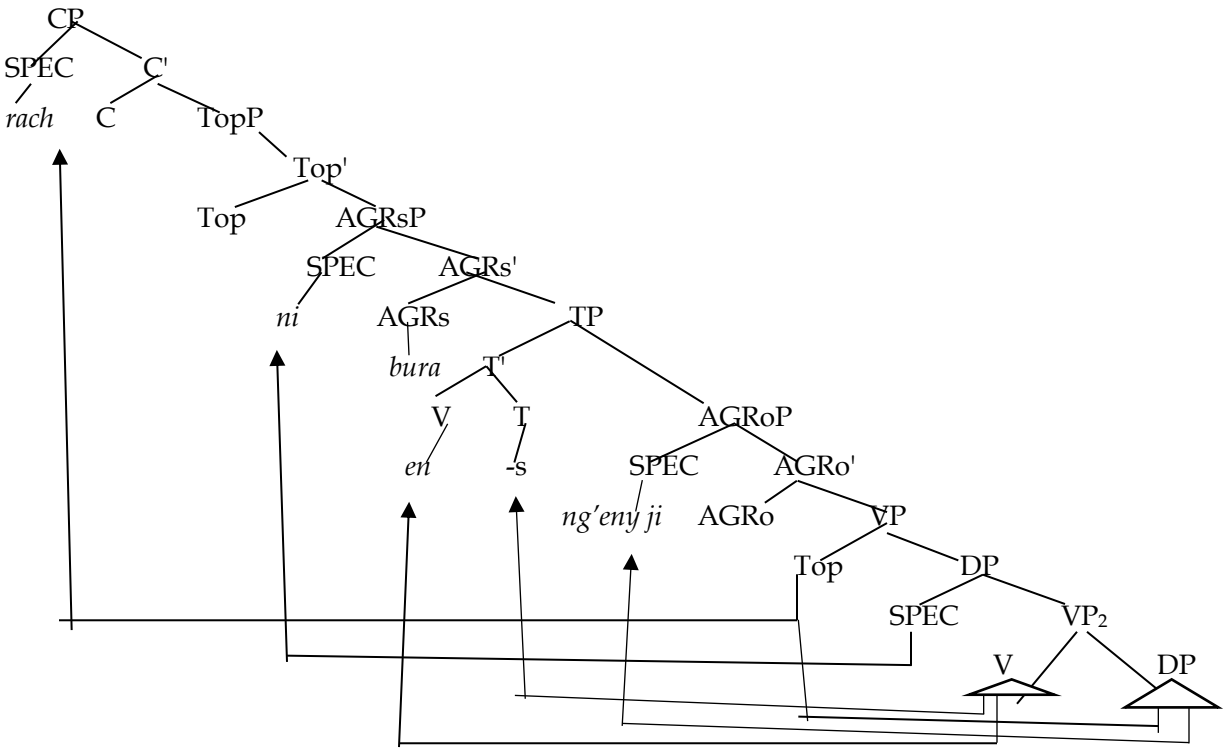

Figure 5: Configuration for the Topic-Tail-Rheme word order pattern 'Nyathi, Onyango kik mul'

As shown in figure 5 above, the topic '*rach*' moves from within the VP domain to SPEC/CP to check its +T features. The subject argument components *'bura'* and *'ni'* make their individual movements from the VP matrix to AGRs/AGRs' and SPEC/AGRsP nodes respectively to their check its nominative feature. The auxiliary *'e'* is made to move for tense feature interpretation. The object argument 'ng'eny ji' moves to SPEC/AGRoP node for accusative feature checking.

Conclusion

In MP analysis of Dholuo constructions, it can be argued that syntactic structure of a sentence directs the computational process of the MP theory and the order in which the features are checked and interpreted is governed by the deep structure of that particular sentence rather than its surface structure. Therefore, for an MP analysis of any word order patterns in Dholuo the configuration depends on the sentence structure. For pragmatic feature checking and interpretation, it is only the topic and the focus with strong features to be checked. The other pragmatic elements: theme, rheme and tail are not strong to generate features to be checked instead they are checked as syntactic elements given that they can as well be interpreted within syntactic domain. The checking and interpretation are said to happen after drawing of the features from the lexicon to the numeration. (Theme and Rheme are Prague School / Systemic Functional Grammar (SFG) labels. They are descriptive concepts used to track the flow of information across sentences. They are not structural "syntactic elements" and they do not possess features that can be "checked" in a Minimalist tree).



References

Birner, J. B., & Ward, G. (1998). Information Status and Noncanonical Word Order in English. John Benjamins Publishing Company.

Blekher, M. (1995). Word Order and Discourse Management in Russian. *University of Alberta Papers in Experimental and Theoretical Linguistics, 3, 1-14.*

Bresnan, J., & Mchombo, S. A. (1987). Topic, Pronoun and Agreement in Chichewa. *Linguistic Society of America, 63, 741-782.*

Chomsky, N. (1995). *The Minimalist Program*.: MIT Press.

Denzin, N.K, & Lincoln, Y.S. (2003). *Collecting and Interpreting Qualitative Materials (2nd ed.)*. Sage Publication, Inc.

Fujihara, R., Kuribayasi, T., Abe, K., Tokuhisa, R., & Inui, K. (2022). Topicalisation in Language Models: A Case Study on Japanese. Proceedings of the 29th International Conference on Computational Linguistics. 851-863. October 12, 17 2022.

Halliday, M., Christian MIM, M., & Christian M. (2014). *Introduction to Functional Grammar. Routledge.*

Hubert, H. (1990). Topicalisation and other puzzles of German syntax., in Gunther Grewendorf & Wolfgang Sternefeld (eds.). *Scrambling and Barriers.* Amsterdam: Benjamins, 93-112.

Ilić, B. M. (1998). Discourse functions of word order changes in English declarative sentences. *Facta Universitatis-Linguistics and Literature, 1, 301-313.*

Jerono, P. (2012). *Tugen Word Order: A Minimalist Perspective*. EGALITE (department. European Scientific Institute), Republic of Macedonia. Unpublished MA Dissertation, University of Nairobi. Nairobi.

Kidwai, A. (1999). Word order and focus positions in universal grammar. In: Georges Rebuschi and Laurice Tuller (eds.). *The Grammar of Focus.* John Benjamins. Amsterdam/Philadelphia: 213-244.

Kiguru, G. (2014). A Critical Discourse Analysis of Language Used in Selected Courts of Law in Kenya. Unpublished PhD Dissertation. Kenyatta University, Kenya.

Koike, S. (1997). Movement in Japanese relative clauses. In: Dorothee Beerman, David LeBlanc and Henk van Riemsdijk (eds.). *Rightward Movement*. John Benjamins. Amsterdam: 171-184.

Mwamzandi, M. Y. (2014). *Swahili word order choices: insights from information structure*. The University of Texas at Arlington.

Okombo, O. D. (1997). *A Functional Grammar of Dholuo*. Nilo-Saharan, 2. Koln: Koppe.

Randy, J. L. (1995). Pragmatic relations and word order in Chinese. *Typological Studies in Language, 3, 297-329.*

Sande, W. O. (2016). A Minimalist Analysis of Dholuo Verbal Extension. Unpublished Masters Dissertation. Jaramogi Oginga Odinga University of Science and Technology, Kenya.

Sande, W. O. (2019). A Description of Olusuba Morphophonology: Towards Preservation of an Endangered Language. Unpublished PhD Dissertation. Jaramogi Oginga Odinga University of Science and Technology, Kenya.

Stavros, S., Caroline, F., & Rusudan, A. (2009). Word order and intonation in Georgian. *Humanwissenschaftliche Fakultä, 1, 102-127.*

Temürcü, C. (2002). The interaction of syntax and discourse in word order: data from Turkish. *Center for Grammar, Cognition and Typology The University of Antwerp, 1, 1-28.*

Travis, L. (1984). Parameters and Effects of Word Order Variation. Unpublished PhD Dissertation. Massachusetis Institute of Technology.

Vaux, B., & Cooper, J. (2003). *Introduction to Linguistic Field Methods*. LINCOM GmbH.